Specification Sheets for Wallingford Town Vanities.

SPECIFICATION VARIANCES

Dimensions on finished vanities may vary slightly from those shown on these specification sheets due to variability in construction materials.

Our products are engineered to maintain close dimensional tolerances but variability in manufacturing materials can change dimensions slightly (normally within +/-1/8" but occasionally up to +/-3/16").

In most applications these slight variations will have no impact upon installation, appearance or function. However, when planning and finishing a space for a built in vanity, **do not frame or finish the space before measuring the actual cabinet!**

We can not be responsible for any expenses incurred as a result of the end user or contractor not following this guideline.

REV: 2021-01

STRASSER

Specifications:

Wallingford Town Vanity
48" wide

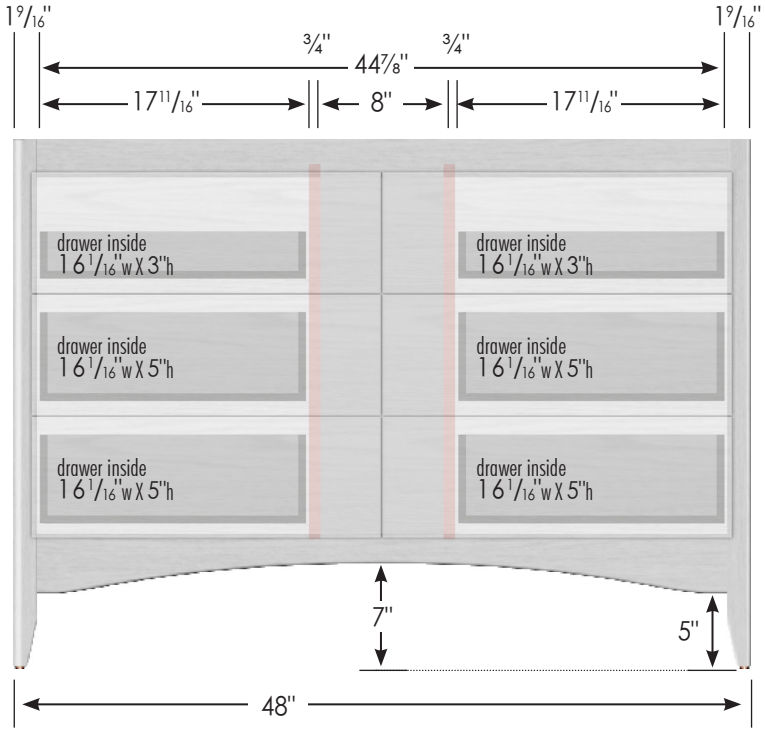

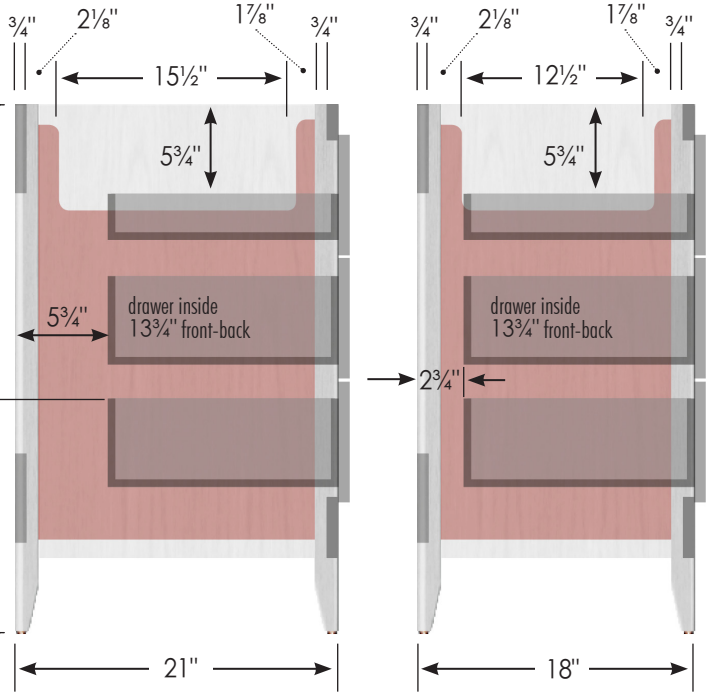

internal dividers

48" wide, 34½" tall
21" or 18" front-to-back

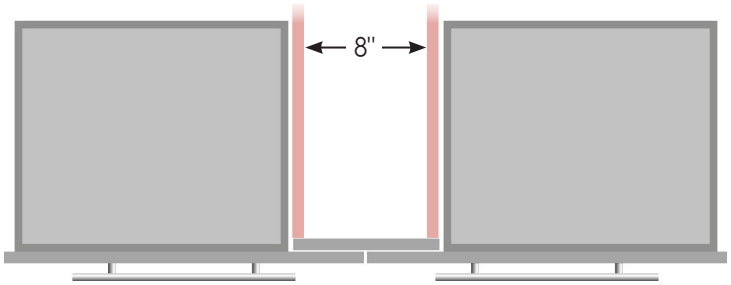

Vanity back clear openings for plumbing

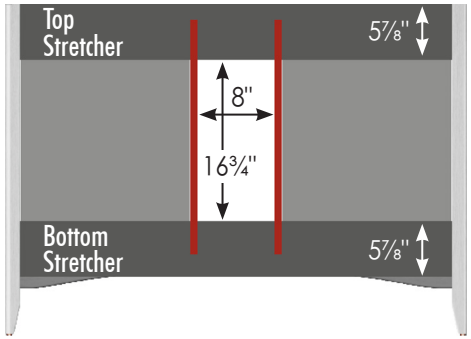

STRASSER

Wallingford Town Vanity
42" wide

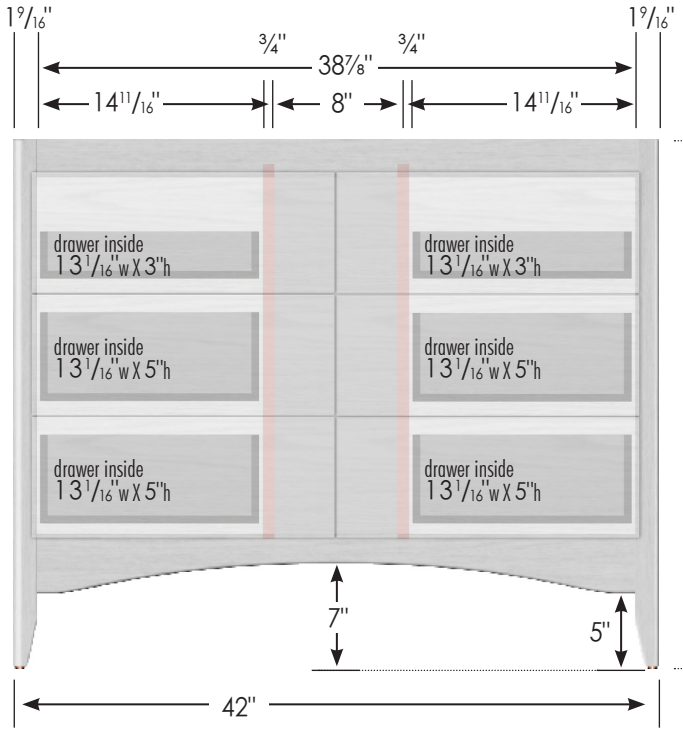

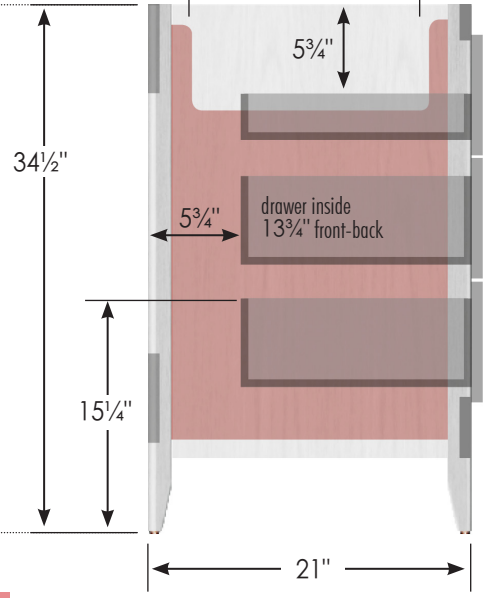

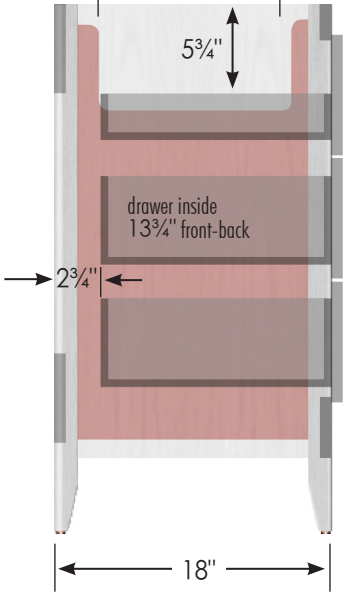

internal dividers

42" wide, 34½" tall
21" or 18" front-to-back

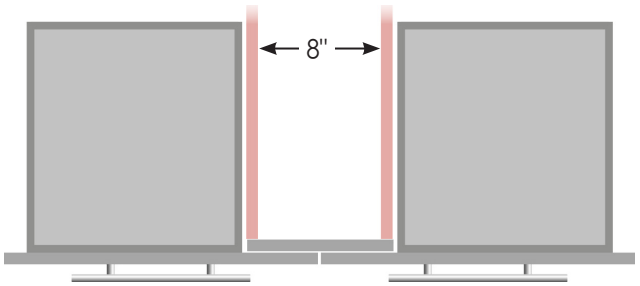

Vanity back clear openings for plumbing

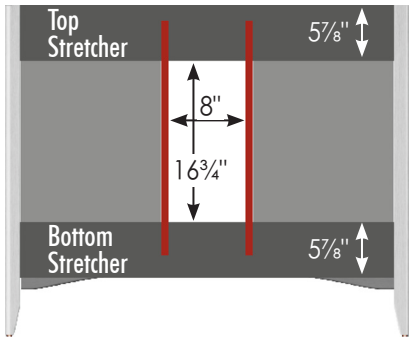

STRASSER

Wallingford Town Vanity
36" wide

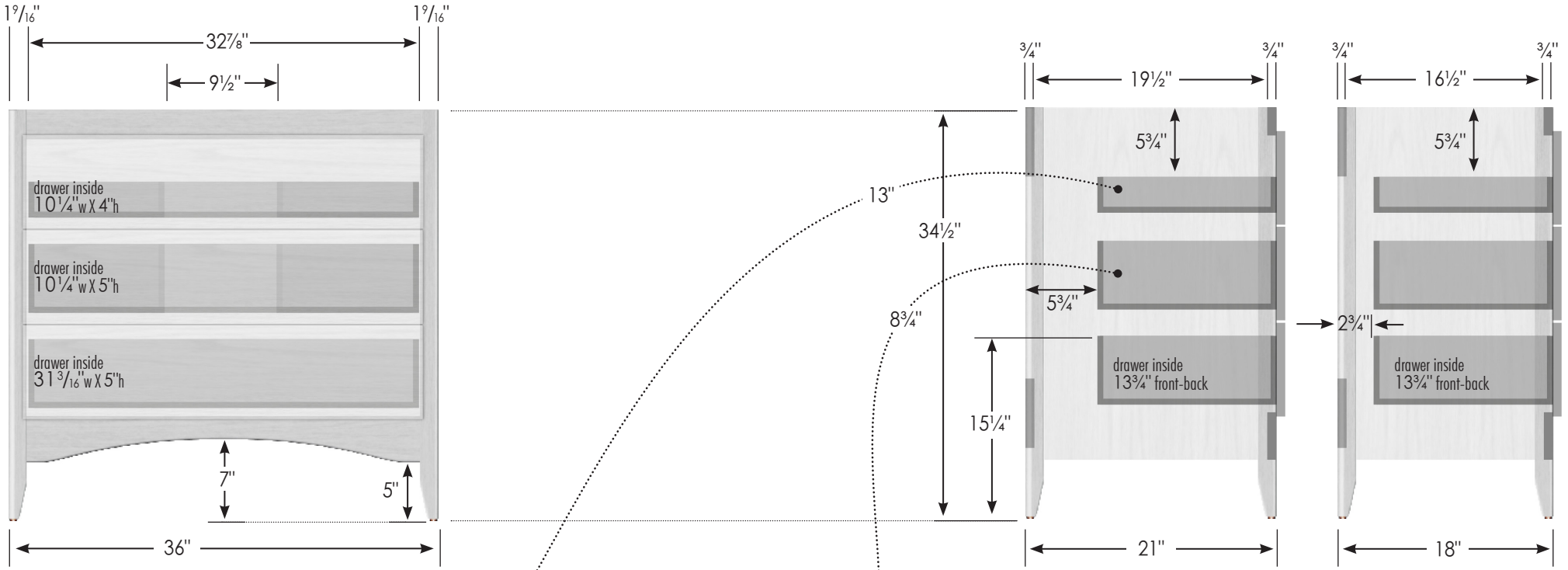

36" wide, 34½" tall
21" or 18" front-to-back

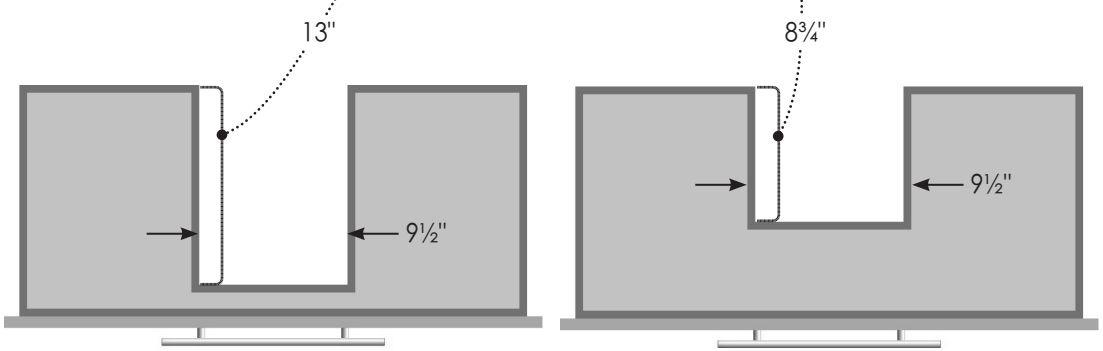

Vanity back clear openings for plumbing

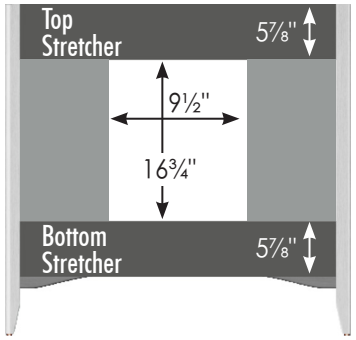

STRASSER

Wallingford Town Vanity
30" wide

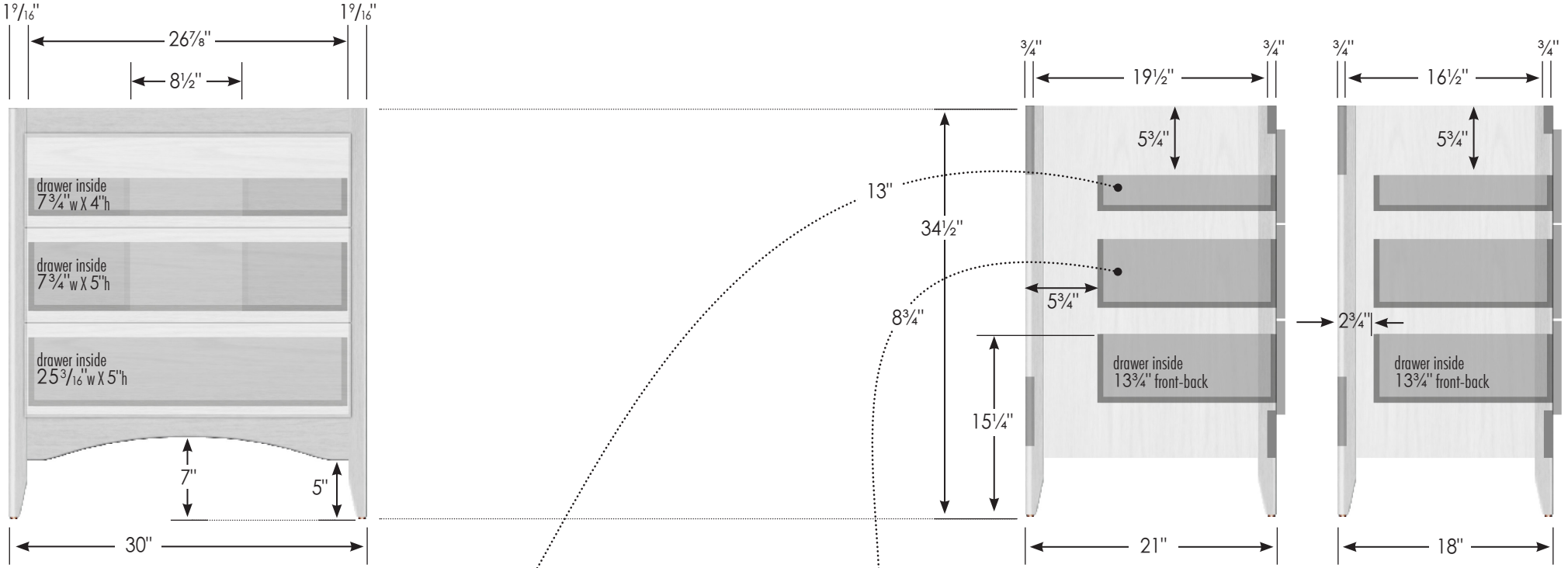

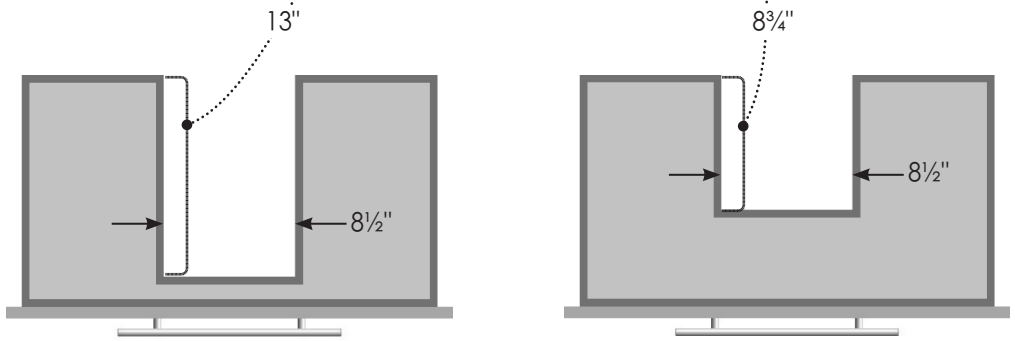

30" wide, 34½" tall
21" or 18" front-to-back

Vanity back clear openings for plumbing

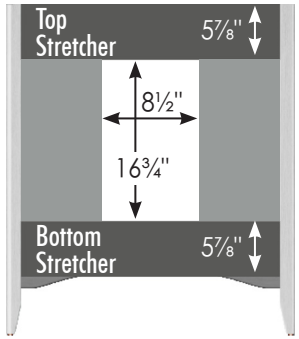

STRASSER

Wallingford Town Vanity
24" wide

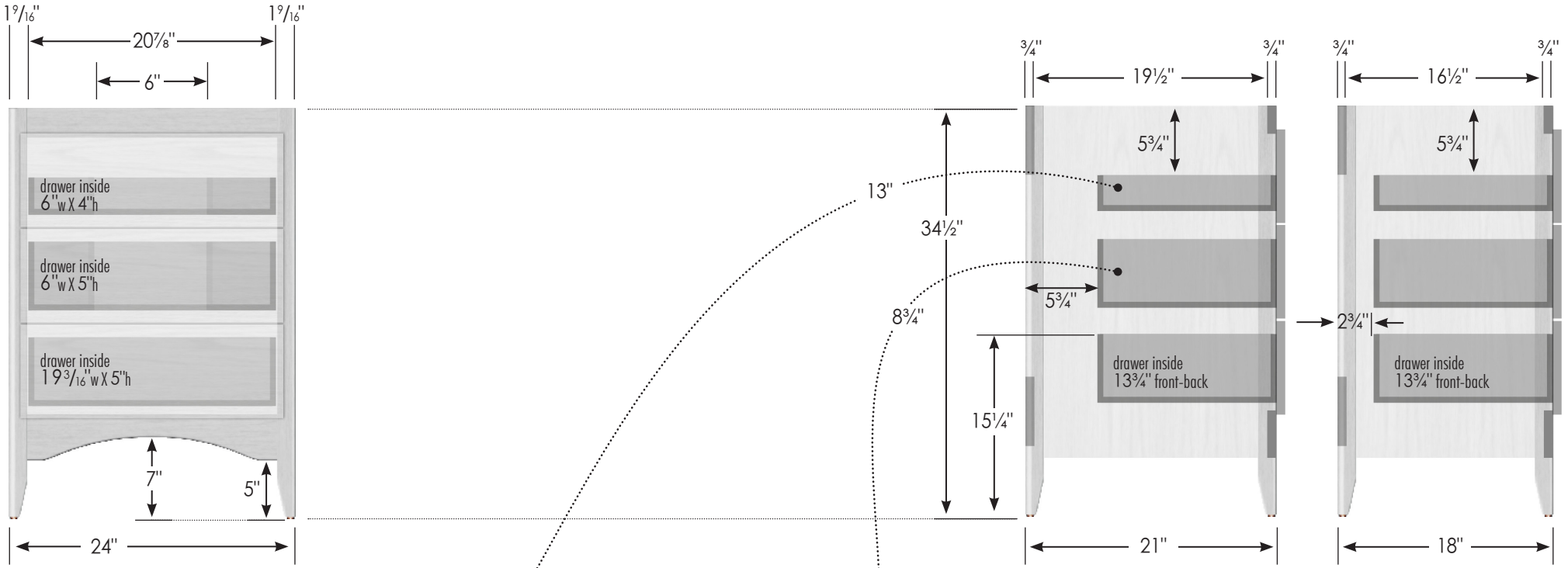

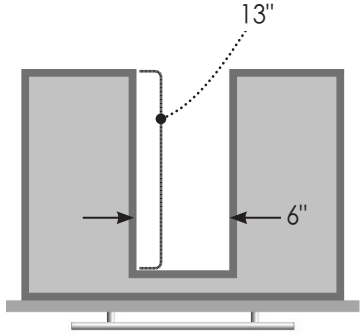

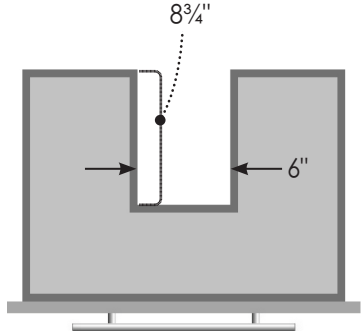

24" wide, 34½" tall
21" or 18" front-to-back
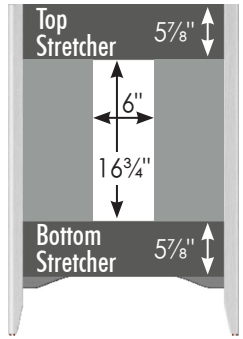
Vanity back clear openings for plumbing